TopTrike BALANCER

64320

CE

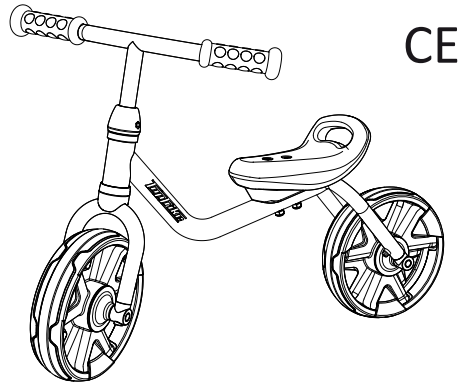

beleduc

beleduc Lernspielwaren GmbH
Heinrich-Heine-Weg 2
09526 Olbernhau / Germany
www.beleduc.de

Contents

Important: Please retighten the screws after 14 days and then at regular intervals
NOTE: Please read instructions before starting to assemble

A

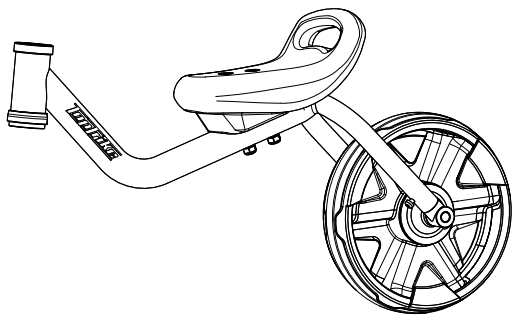

B

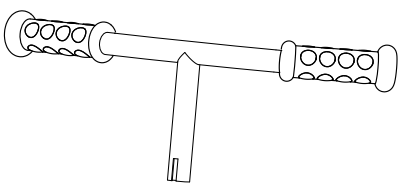

X1

C

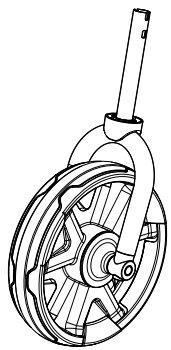

X1

D



X1

E

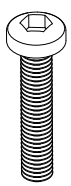

X1

F



X1

G



X1

1

24 M +

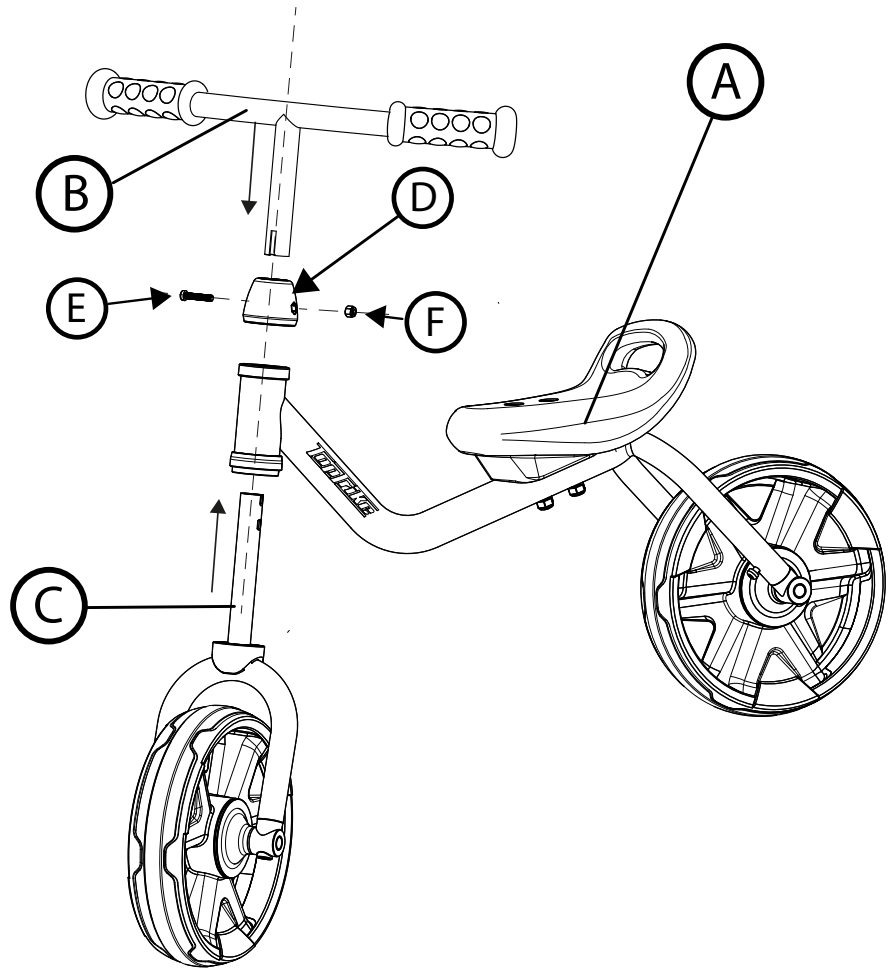

⚠ WARNING ! ⚠
(only during the construction)
CHOKING HAZARD- Small parts.
Not for children under 3 years

ADULT ASSEMBLY REQUIRED.