TopTrike CRUISER

64310

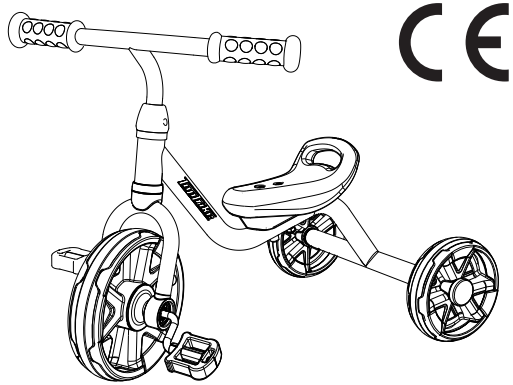

beleduc

beleduc Lernspielwaren GmbH
Heinrich-Heine-Weg 2
09526 Olbernhau / Germany
www.beleduc.de

Contents

Important: Please retighten the screws after 14 days and then at regular intervals
NOTE: Please read instructions before starting to assemble

A

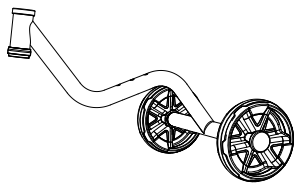

X1

B

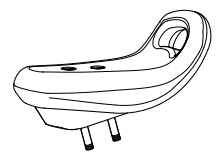

X1

C

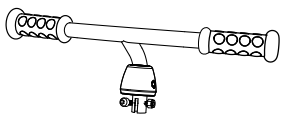

X1

D

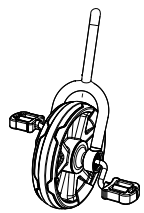

X1

E

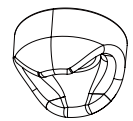

X1

F



X2

G



X2

H

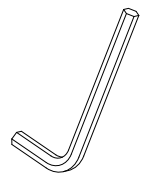

X1

I

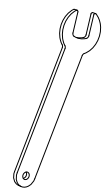

X1

1

18 M +

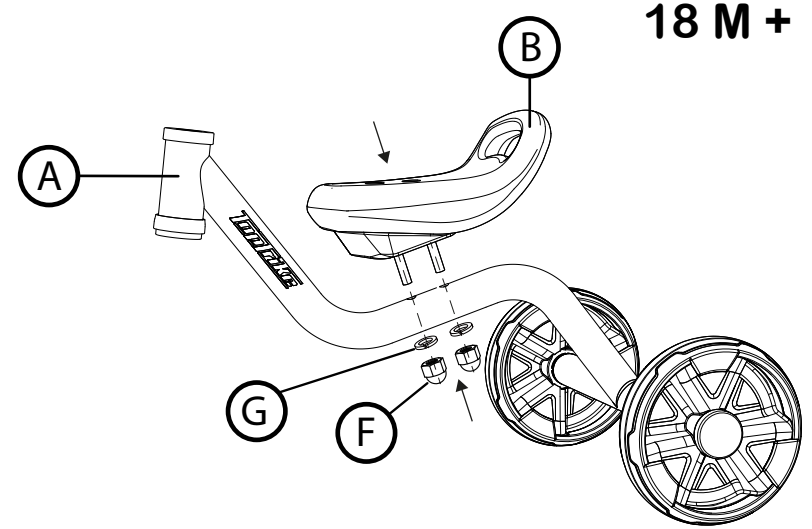

2

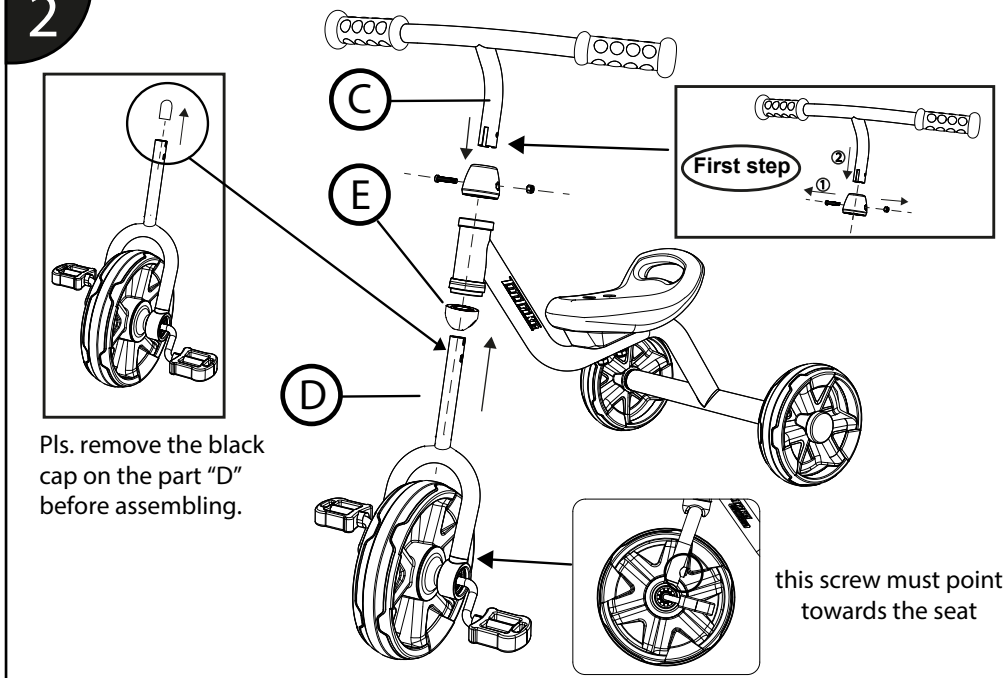

Pls. remove the black cap on the part "D" before assembling.

this screw must point towards the seat

ADULT ASSEMBLY REQUIRED.

⚠ WARNING ! ⚠
(only during the construction)
CHOKING HAZARD- Small parts.
Not for children under 3 years