belsduc

12 months +

Wild Climber "Elephant Body"

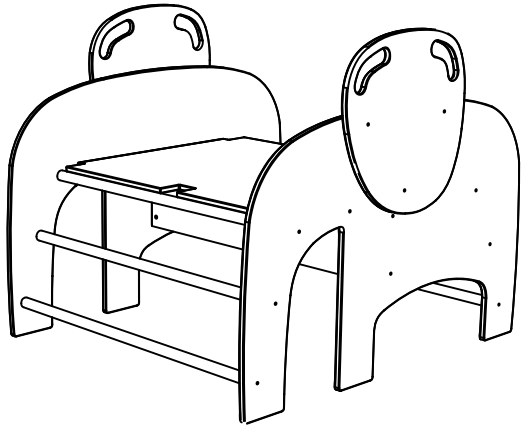

⚠ WARNING:

This toy requires adult assembly.
Unassembled, it contains potentially hazardous points and small parts.
Please keep it out of baby's reach.

Contents

NOTE: Please read instructions before assembly.
Further instruction available at www.beleduc.de/instructions

CE **B18021**

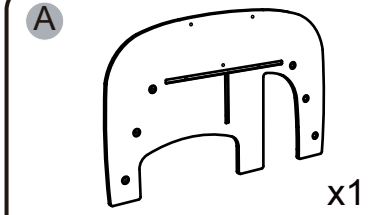

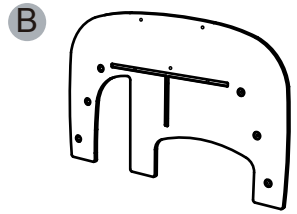

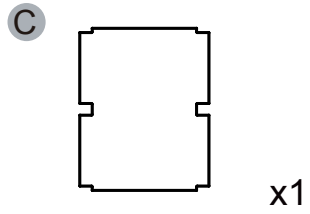

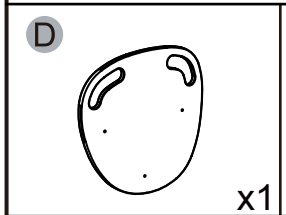

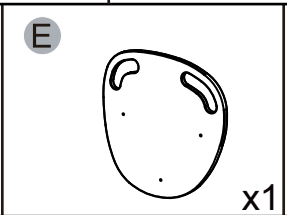

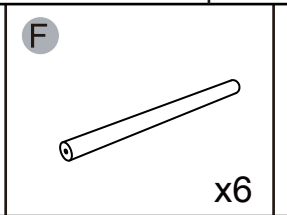

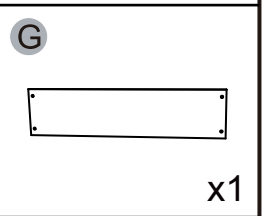

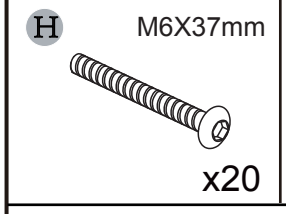

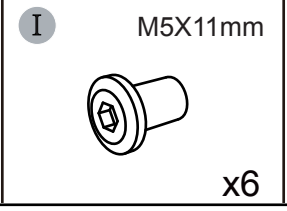

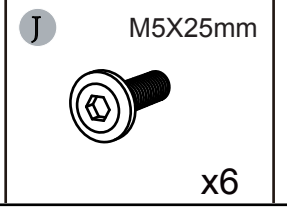

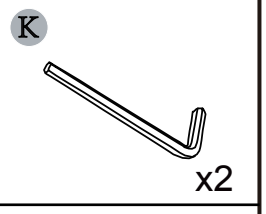

PAGE 1

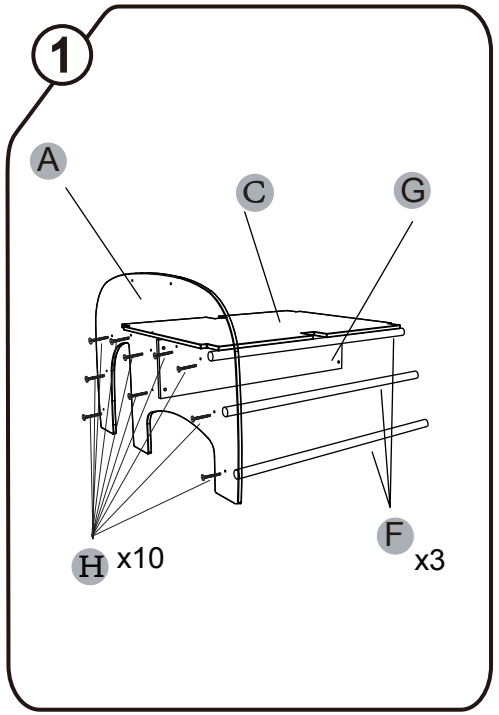

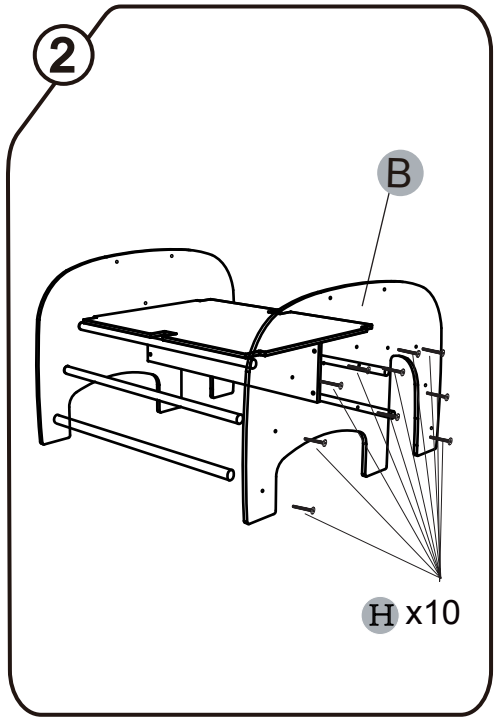

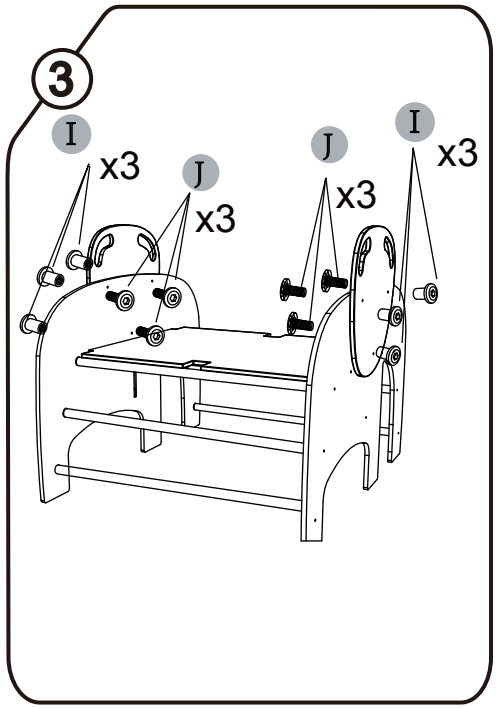

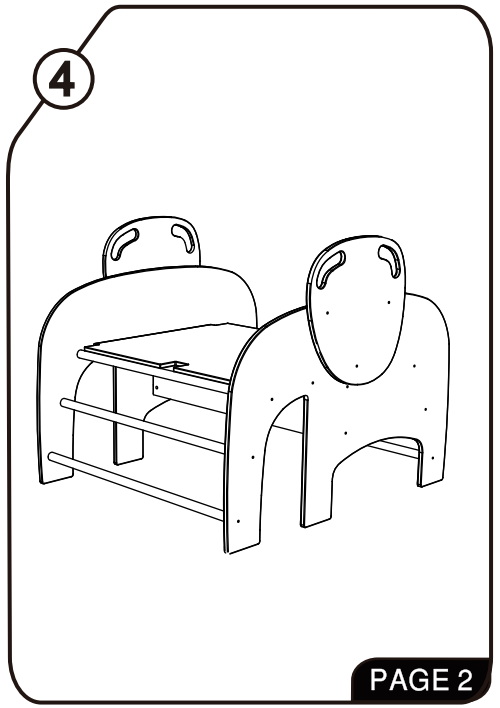

PAGE 2

666895.V1.0 17.11.14

belsduc

12 months +

Wild Climber "Crocodile - Slide"

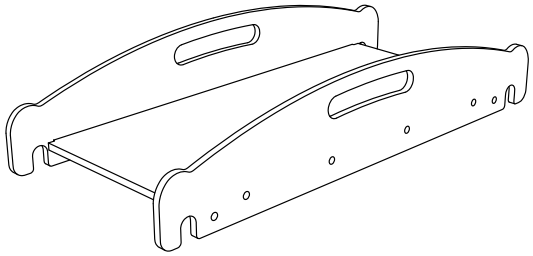

⚠ WARNING:

This toy requires adult assembly.
Unassembled, it contains potentially hazardous points and small parts.
Please keep it out of baby's reach.

Contents

NOTE: Please read instructions before assembly.
Further instruction available at www.beleduc.de/instructions

CE B18022

A1

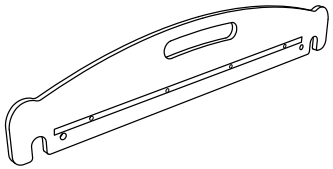

x2

B

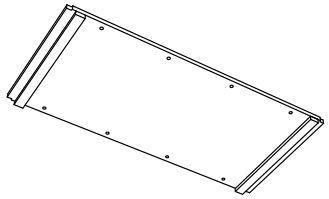

x1

C M6X37mm

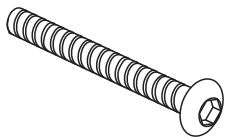

x12

D

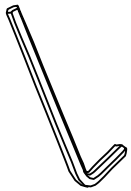

x1

PAGE 1

666896.V1.0 17.11.09

1

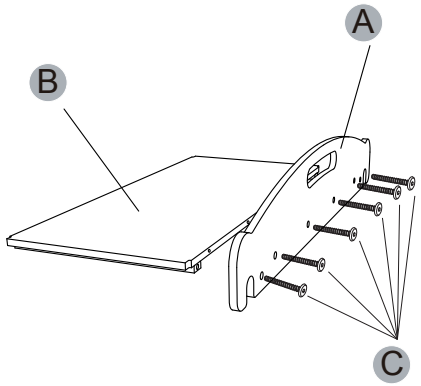

x6

2

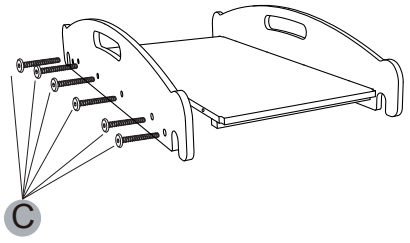

x6

3

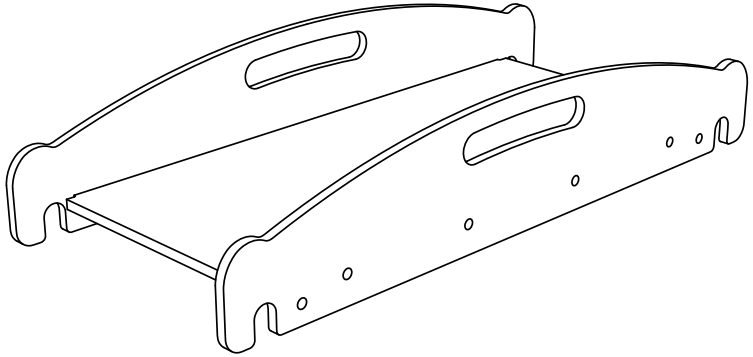

PAGE 2

belsduc

12 months +

Wild Climber "Crocodile - Half Cylinder"

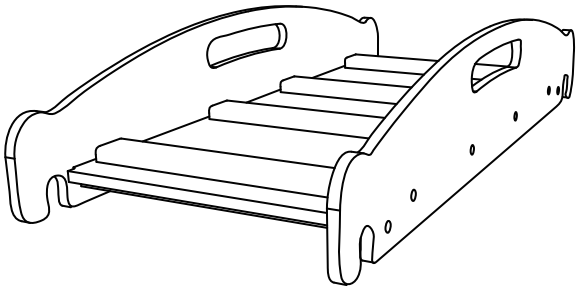

⚠ WARNING:

This toy requires adult assembly.
Unassembled, it contains potentially hazardous points and small parts.
Please keep it out of baby's reach.

Contents

NOTE: Please read instructions before assembly.
Further instruction available at www.beleduc.de/instructions

CE B18023

A 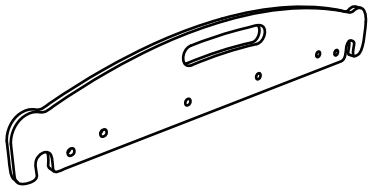 x2	C M6X37mm 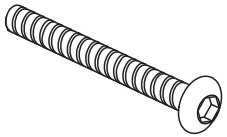 x12
B 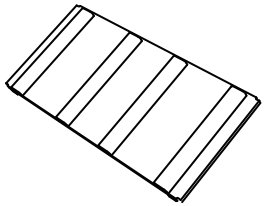 x1	D 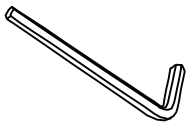 x1

1

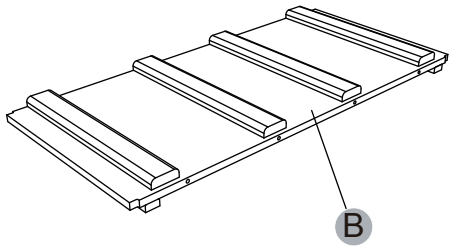

2

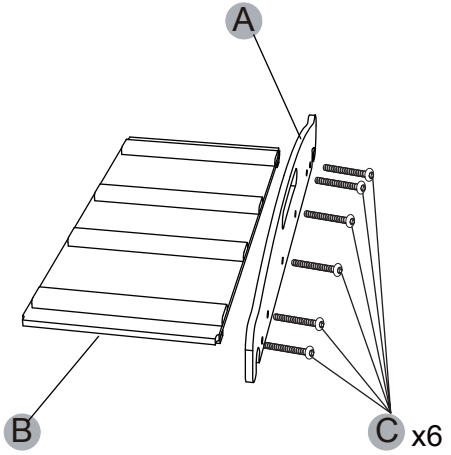

3

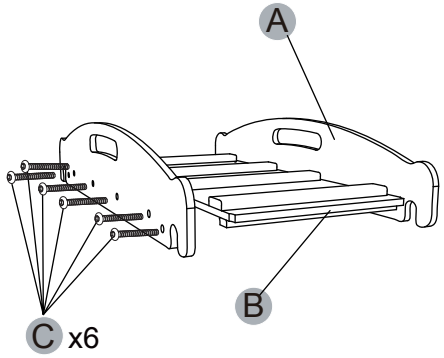

4

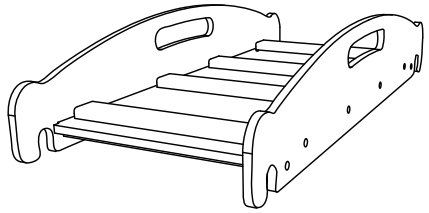

666897.V1.0 17.11.14

beleduc

12 months +

Wild Climber "Crocodile - Stone"

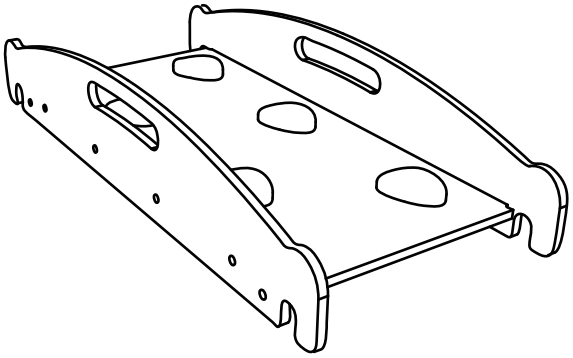

⚠ WARNING:

This toy requires adult assembly.
Unassembled, it contains potentially hazardous points and small parts.
Please keep it out of baby's reach.

Contents

NOTE: Please read instructions before assembly.
Further instruction available at www.beleduc.de/instructions

CE **B18024**

A 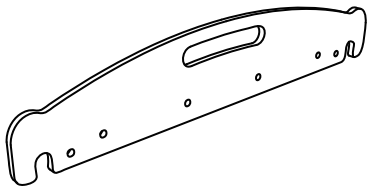 x2	C M6X37mm 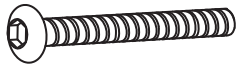 x12
B 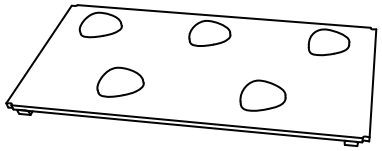 x1	D  x1

666898.V1.0 17.11.14

1

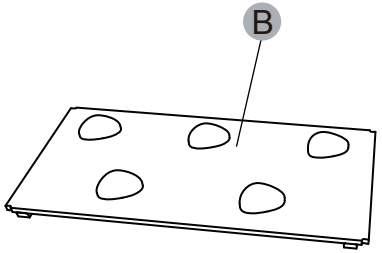

2

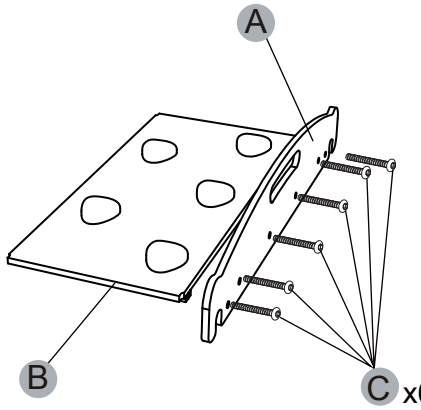

3

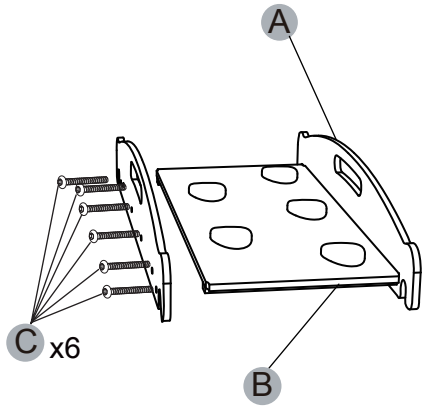

4

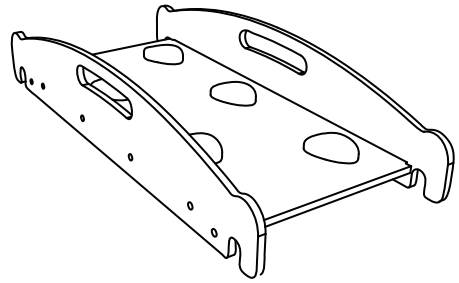

belsduc

12 months +

Wild Climber "Rhino - Slide"

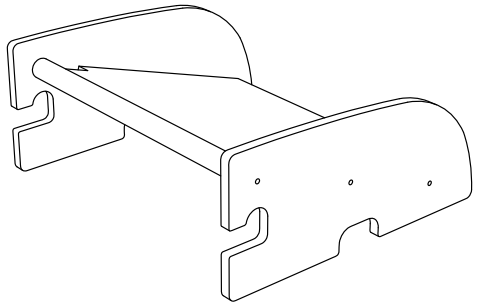

⚠ WARNING:

This toy requires adult assembly.
Unassembled, it contains potentially hazardous points and small parts.
Please keep it out of baby's reach.

Contents

NOTE: Please read instructions before assembly.
Further instruction available at www.beleduc.de/instructions

CE B18025

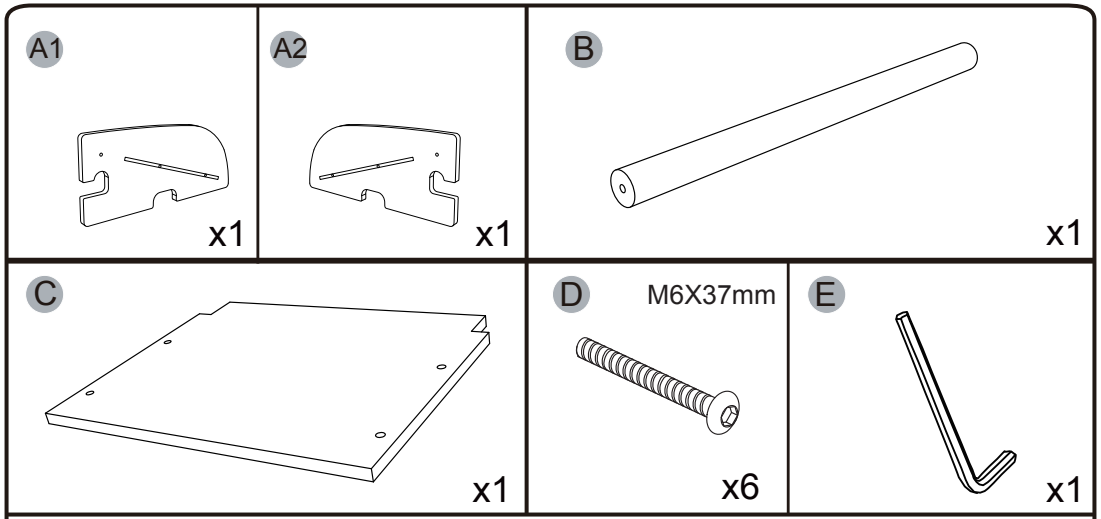

666899.V1.0 17.11.09

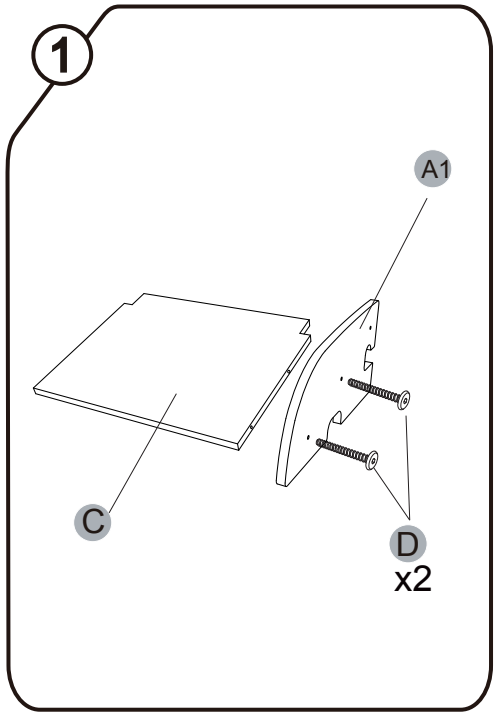

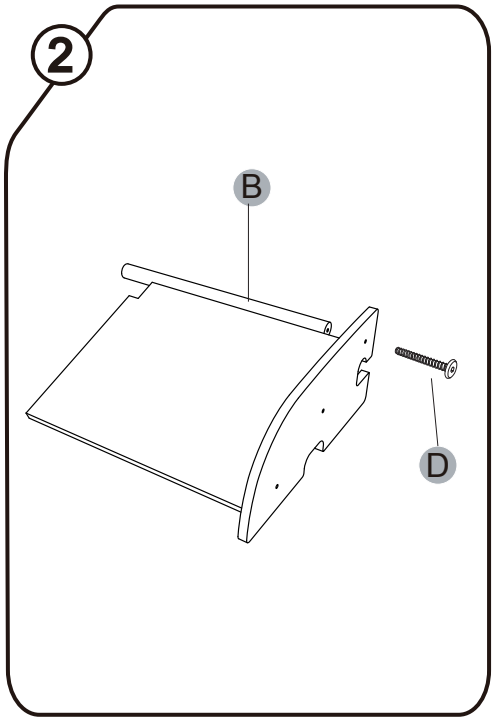

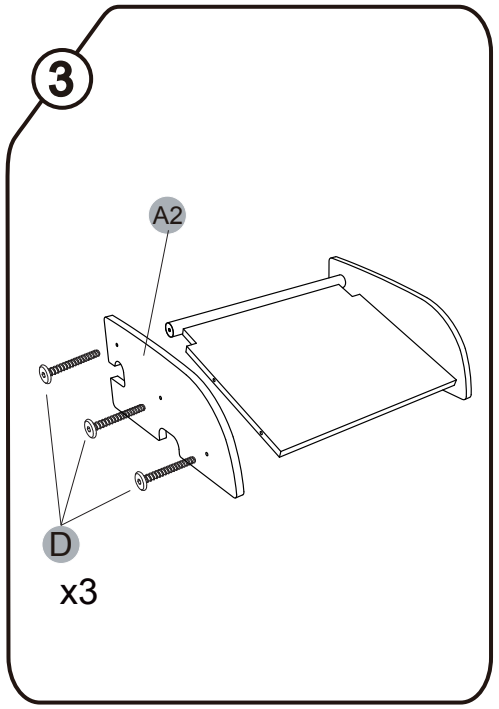

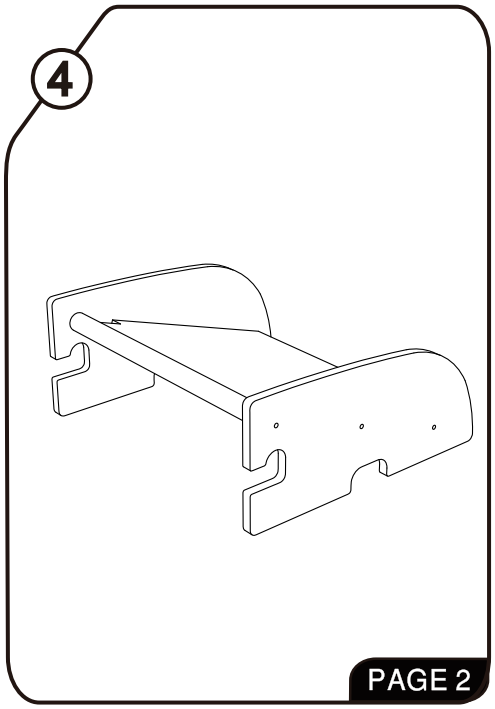

belsduc

12 months +

Wild Climber "Rhino - Stair"

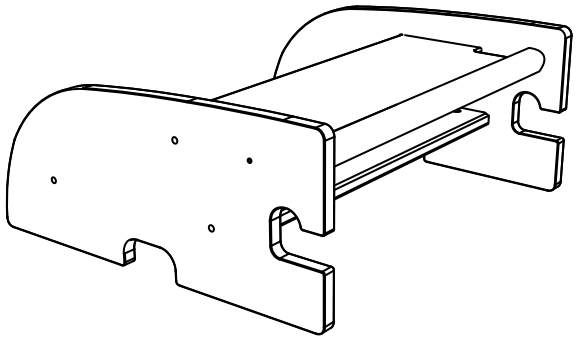

⚠ WARNING:

This toy requires adult assembly.
Unassembled, it contains potentially hazardous points and small parts.
Please keep it out of baby's reach.

Contents

NOTE: Please read instructions before assembly.
Further instruction available at www.beleduc.de/instructions

CE B18026

A 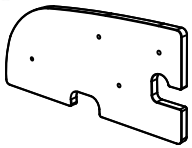 x1	B 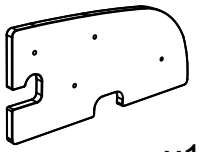 x1	C  x1	D 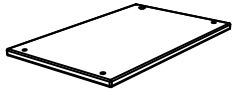 x1
E 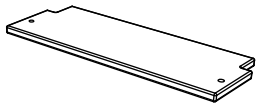 x1	F M6X37mm 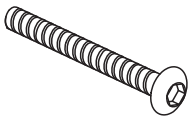 x8	G 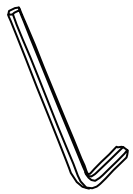 x1	

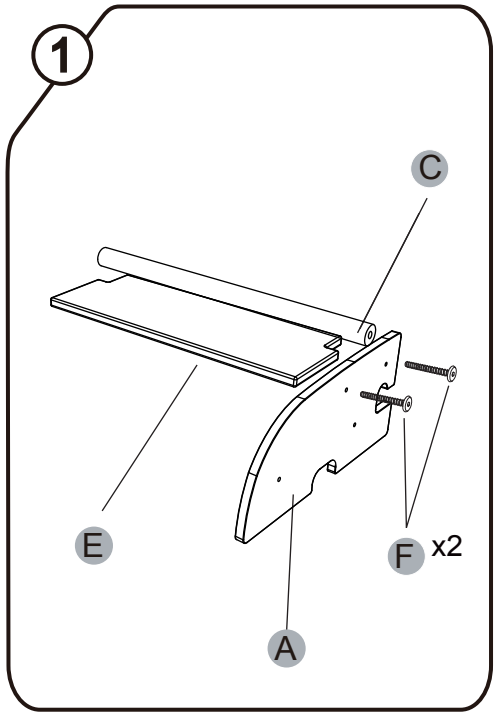

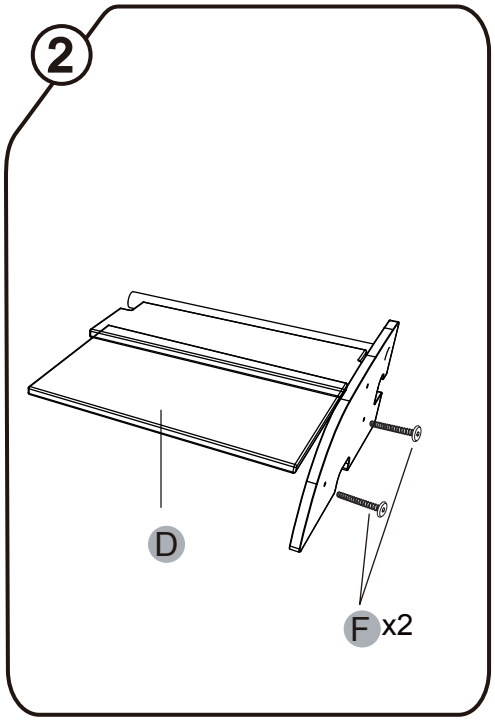

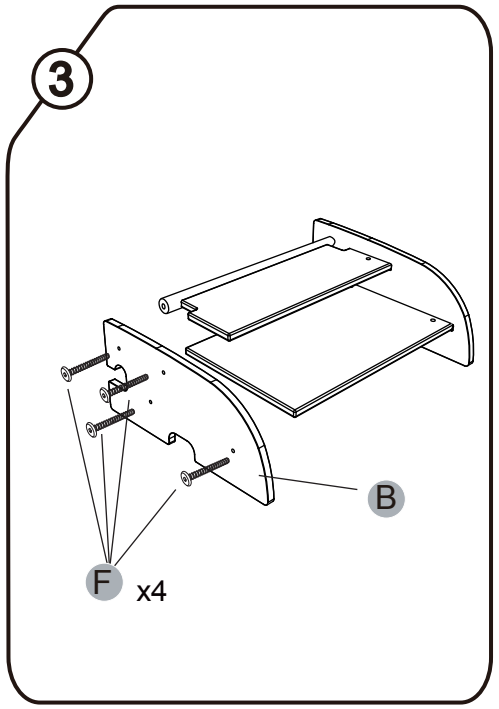

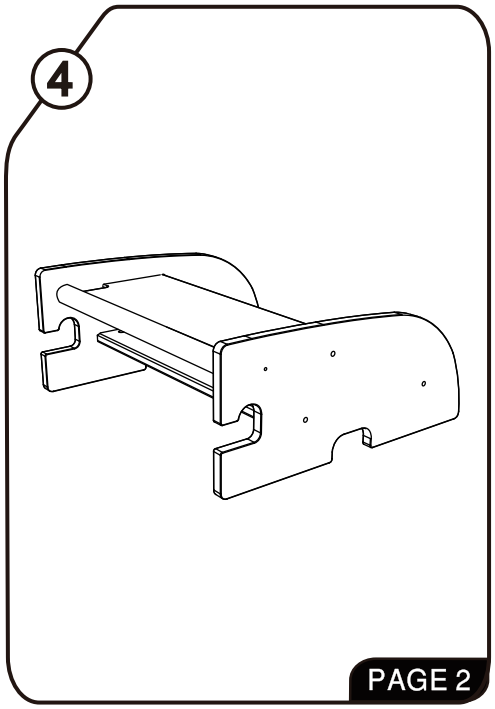

666900.V1.0 17.11.14

beleduc

12 months +

Wild Climber "Hippo"

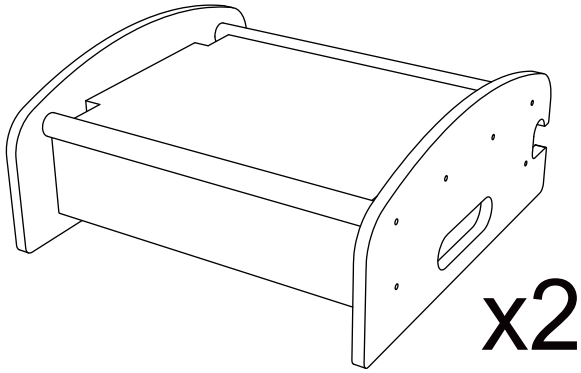

x2

⚠ WARNING:

This toy requires adult assembly.
Unassembled, it contains potentially hazardous points and small parts.
Please keep it out of baby's reach.

Contents

NOTE: Please read instructions before assembly.
Further instruction available at www.beleduc.de/instructions

CE B18027

A1 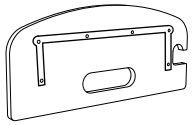 x2	A2 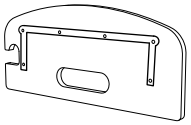 x2	B 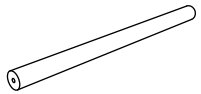 x4	C 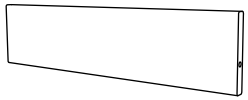 x4
D 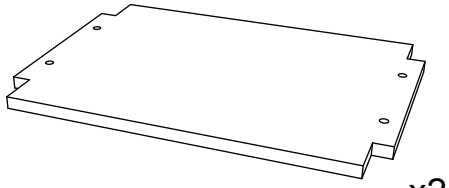 x2	E M6X37mm 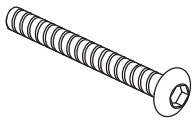 x24	F 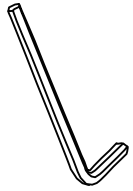 x1	

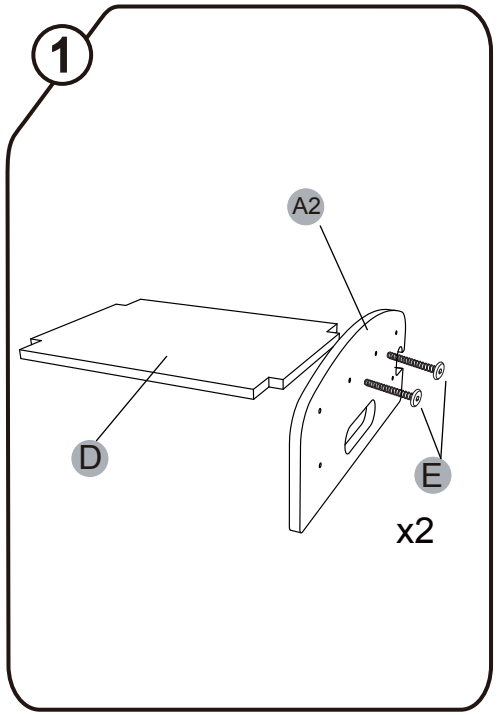

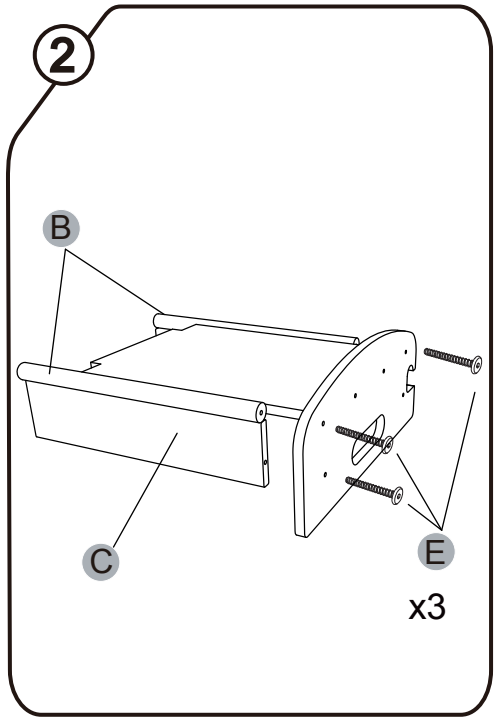

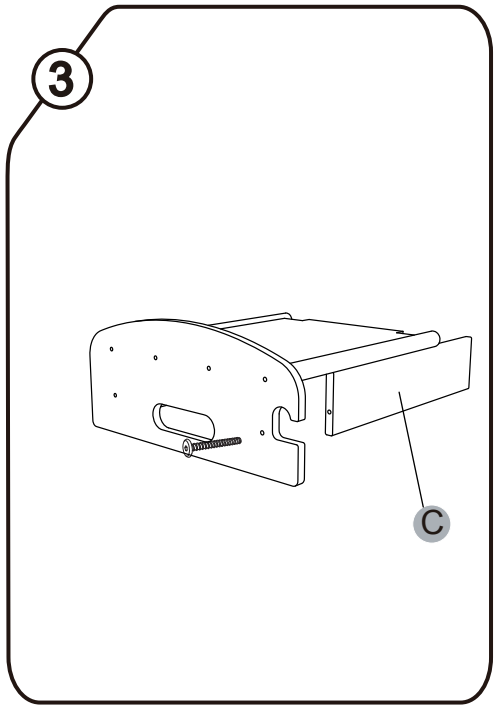

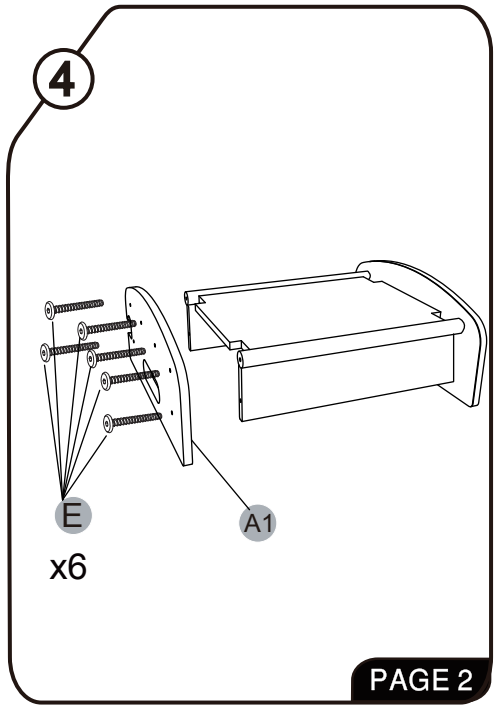

666901V01.V2.0 22.01.27